Pearson Edexcel

Topic Test
Summer 2022

Pearson Edexcel GCE Mathematics (9MA0)

Paper 3 – Mechanics

Topic 3: Kinematics-Projectiles

Contents

General guidance to Topic Tests 3

Revise Revision Guide content coverage 4

Questions 5

Mark Scheme 27

Questions

Question T3_Q1

6. At time t seconds, where $t \geqslant 0$, a particle P moves in the x-y plane in such a way that its velocity $\mathbf{v}\,\mathrm{m\,s^{-1}}$ is given by

$$\mathbf{v} = t^{-\frac{1}{2}}\mathbf{i} - 4t\mathbf{j}$$

When $t = 1$, P is at the point A and when $t = 4$, P is at the point B.

Find the exact distance AB.

(6)

Question 6 continued

Question T3_Q2

10.

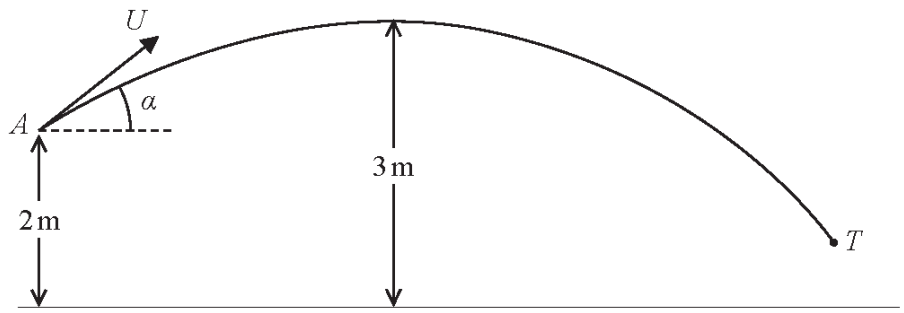

Figure 4

A boy throws a ball at a target. At the instant when the ball leaves the boy's hand at the point A, the ball is 2 m above horizontal ground and is moving with speed U at an angle α above the horizontal.

In the subsequent motion, the highest point reached by the ball is 3 m above the ground. The target is modelled as being the point T, as shown in Figure 4.
The ball is modelled as a particle moving freely under gravity.

Using the model,

(a) show that $U^2 = \dfrac{2g}{\sin^2 \alpha}$.

(2)

The point T is at a horizontal distance of 20 m from A and is at a height of 0.75 m above the ground. The ball reaches T without hitting the ground.

(b) Find the size of the angle α

(9)

(c) State one limitation of the model that could affect your answer to part (b).

(1)

(d) Find the time taken for the ball to travel from A to T.

(3)

Question 10 continued

Question 10 continued

Question 10 continued

Question 10 continued

Question T3_Q3

5.

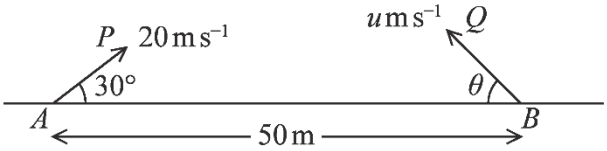

Figure 3

The points A and B lie 50 m apart on horizontal ground.

At time $t = 0$ two small balls, P and Q, are projected in the vertical plane containing AB.

Ball P is projected from A with speed $20\,\text{m s}^{-1}$ at 30° to AB.

Ball Q is projected from B with speed $u\,\text{m s}^{-1}$ at angle θ to BA, as shown in Figure 3.

At time $t = 2$ seconds, P and Q collide.

Until they collide, the balls are modelled as particles moving freely under gravity.

(a) Find the velocity of P at the instant before it collides with Q.

(6)

(b) Find

(i) the size of angle θ,

(ii) the value of u.

(6)

(c) State one limitation of the model, other than air resistance, that could affect the accuracy of your answers.

(1)

Question 5 continued

Question 5 continued

Question 5 continued

Question 5 continued

Question 5 continued

Question T3_Q4

5.

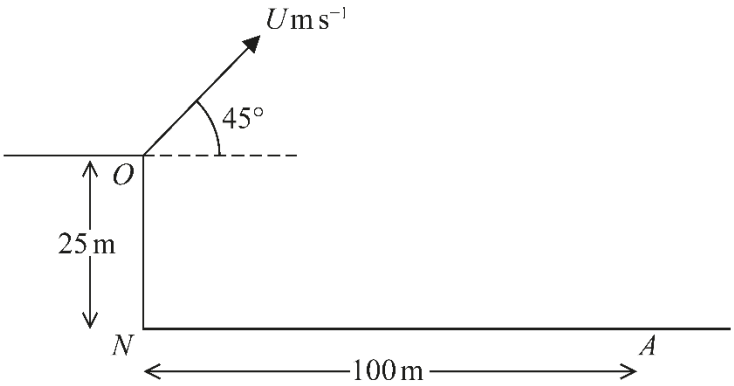

Figure 2

A small ball is projected with speed U m s^{-1} from a point O at the top of a vertical cliff.

The point O is 25 m vertically above the point N which is on horizontal ground.

The ball is projected at an angle of 45° above the horizontal.

The ball hits the ground at a point A, where $AN = 100$ m, as shown in Figure 2.

The motion of the ball is modelled as that of a particle moving freely under gravity.

Using this initial model,

(a) show that $U = 28$

(6)

(b) find the greatest height of the ball above the horizontal ground NA.

(3)

In a refinement to the model of the motion of the ball from O to A, the effect of air resistance is included.

This refined model is used to find a new value of U.

(c) How would this new value of U compare with 28, the value given in part (a)?

(1)

(d) State one further refinement to the model that would make the model more realistic.

(1)

Question 5 continued

Question 5 continued

Question 5 continued

Question 5 continued

Question T3_Q5

4.

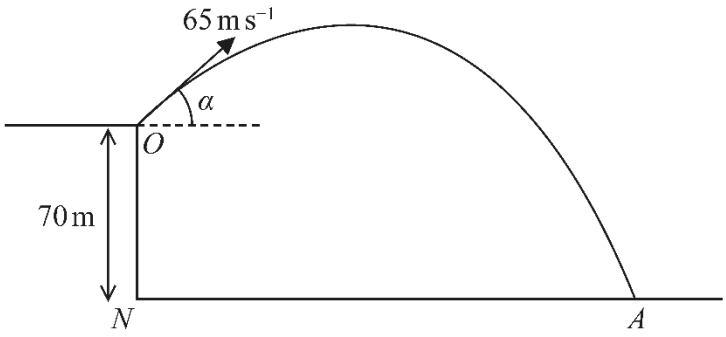

Figure 3

A small stone is projected with speed $65\,\text{m}\,\text{s}^{-1}$ from a point O at the top of a vertical cliff.

Point O is 70 m vertically above the point N.

Point N is on horizontal ground.

The stone is projected at an angle α above the horizontal, where $\tan\alpha = \frac{5}{12}$

The stone hits the ground at the point A, as shown in Figure 3.

The stone is modelled as a particle moving freely under gravity.

The acceleration due to gravity is modelled as having magnitude $10\,\text{m}\,\text{s}^{-2}$

Using the model,

(a) find the time taken for the stone to travel from O to A,

(4)

(b) find the speed of the stone at the instant just before it hits the ground at A.

(5)

One limitation of the model is that it ignores air resistance.

(c) State one other limitation of the model that could affect the reliability of your answers.

(1)

Question 4 continued

Question 4 continued

Question 4 continued